Atlantis headwearevolution

TECHNICAL DATA SHEET

Code: **FIJC**



FIJI

Structured 5 panel baseball cap made of 100% recycled polyester with curved visor and full prostitching. Wide space on the crown for custom patches and hook & loop closure at the back. Fine protection from the sun for summer trekking and outdoor life.

CURVED VISOR
Our visors are made with a technology that maintains a proper curved shape at all times.

HOOK&LOOP CLOSURE
Adjustable back closure with hook&loop strap, suitable for any fit.

RECYCLED BUCRAM
Recycled lamination on front panels to maintain the shape with a slightly higher crown.

SELF FABRIC SWEATBAND
Sweatband in same fabric as cap, enhanced by 4 rows on front, closed on back with a tape.

RECYCLED POLYESTER
Fiber made from polymers obtained by recycling plastic bottles.

Technical accessories

Composition: Main Fabric: 100% Recyecled Polyester Twil - 200 gsm

Visor: Curved/ 6 rows/ Curved Visor

Eyelets: 6 Sewn eyelets on crown

Packing: 24 x 144

Made in: China

Panels: 5 Panels/ full stitching/ atl2

Visor: Curved/ 6 rows/ Retraze Recycled Visor

Size: One size fits all 58-58,5 cm

Custom code: 6505.00.30

Weight: 0.0902

Where to customize

Centimeters

	Front	Back	Closure	Right	Left
Print	12 x 6	-	-	6 x 5	6 x 5
Embroidery	12 x 6	12 x 6	3 x 1	10 x 6	10 x 6
Heat transfer	8 x 6	-	-	-	-

Washing instruction

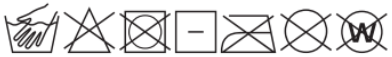

Hand wash/ do not bleach/ do not dry by tumble dryers/ dry flat/ do not iron/ do not dry clean/ do not professional wet clean

Technical Size (cm)

2. 7
3. 16
4. 18
5. 8,5
6. 33
7. 9
8. 2
9. 6,5
10. 8,5

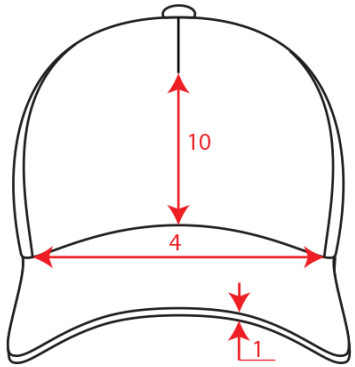

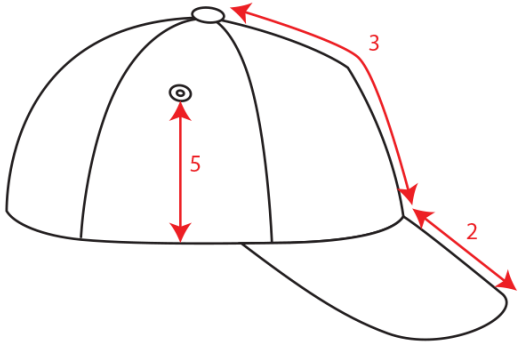

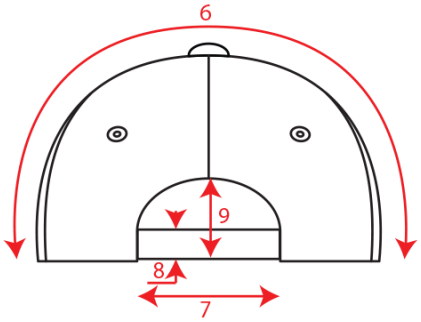

Color variants (TPX / Pantone)

WHITE



SWEATBAND: 11-0601 / WHITE
TAPING: 11-0601 / WHITE
HAT: 11-0601 / WHITE

DARK-GREY



SWEATBAND: 19-3910 / COOL-GREY-11-C
TAPING: 19-3910 / COOL-GREY-11-C
HAT: 19-3910 / COOL-GREY-11-C

KHAKI



SWEATBAND: 15-1213 / 4249-C
TAPING: 15-1213 / 4250-C
HAT: 15-1213 / 4249-C

BLACK



SWEATBAND: 19-4006 / BLACK-6-C
TAPING: 19-4006 / BLACK-6-C
HAT: 19-4006 / BLACK-6-C

NAVY



SWEATBAND: 19-4009 / 533-C
TAPING: 19-4009 / 533-C
HAT: 19-4009 / 533-C

OLIVE



SWEATBAND: 18-0521 / 417-C
TAPING: 18-0521 / 417-C
HAT: 18-0521 / 417-C

RED



SWEATBAND: 19-1762 / 193-C
TAPING: 19-1762 / 193-C
HAT: 19-1762 / 193-C

ROYAL



SWEATBAND: 19-3964 / 3597-C
TAPING: 19-3964 / 3597-C
HAT: 19-3964 / 3597-C

BOTTLE-GREEN



SWEATBAND: 19-4906 / 5535-C
TAPING: 19-4906 / 5535-C
HAT: 19-4906 / 5535-C